A Conservative Extension of Synchronous Data-flow with State Machines

Jean-Louis Colaço, Bruno Pagano
Esterel-Technologies (France)

Marc Pouzet
Université Paris-Sud (France)

Workshop SYNCHRON, Malta
Nov. 24th, 2005

Designing Mixed Systems

Data dominated Systems: continuous and sampled systems, block-diagram formalisms

$\hookrightarrow$ Simulation tools: Simulink, etc.

$\hookrightarrow$ Programming languages: Scade/Lustre, Signal, etc.

Control dominated systems: transition systems, event-driven systems, Finite State Machine formalisms

$\hookrightarrow$ StateFlow, StateCharts

$\hookrightarrow$ SyncCharts, Argos, Esterel, etc.

What about mixed systems?

- most system are a mix of the two kinds: systems have **"modes"**
- each mode is a big control law, naturally described as data-flow equations
- a control part switching these modes and naturally described by a FSM

Extending Scade/Lustre with State Machines

Scade/Lustre:

- data-flow style with synchronous semantics
- certified code generator

Motivations

- activation conditions between several "modes"
- arbitrary nesting of automata and equations
- well integrated, inside the same language (tool)
- in a **uniform formalism** (code certification, code quality, readability)
- be **conservative**: accept all Scade/Lustre and keep the semantics of the kernel
- which can be formely **certified** (to meet avionic constraints)
- efficient code, keep (if possible) the existing certified code generator

First approach: linking mechanisms

- two (or more) specific languages: one for data-flow and one for control-flow
- "linking" mechanism. A sequential system is more or less represented as a pair:
  - a transition function $f : S \times I \rightarrow O \times S$
  - an initial memory $M_0 : S$
- agree on a common representation and add some glue code
- this is provided in most academic and industrial tools
- PtolemyII, Simulink + StateFlow, Lustre + Esterel Sudio SSM, etc.

An example: the Cruise Control (SCADE V4.2)

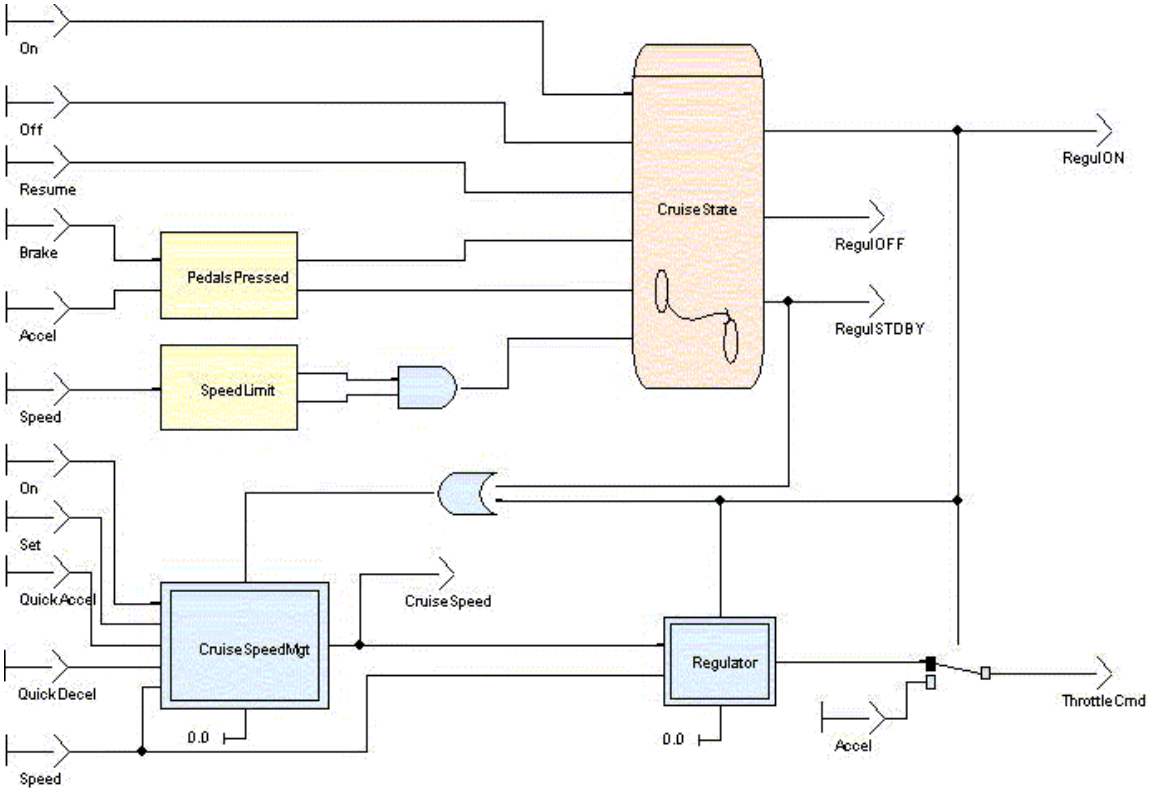

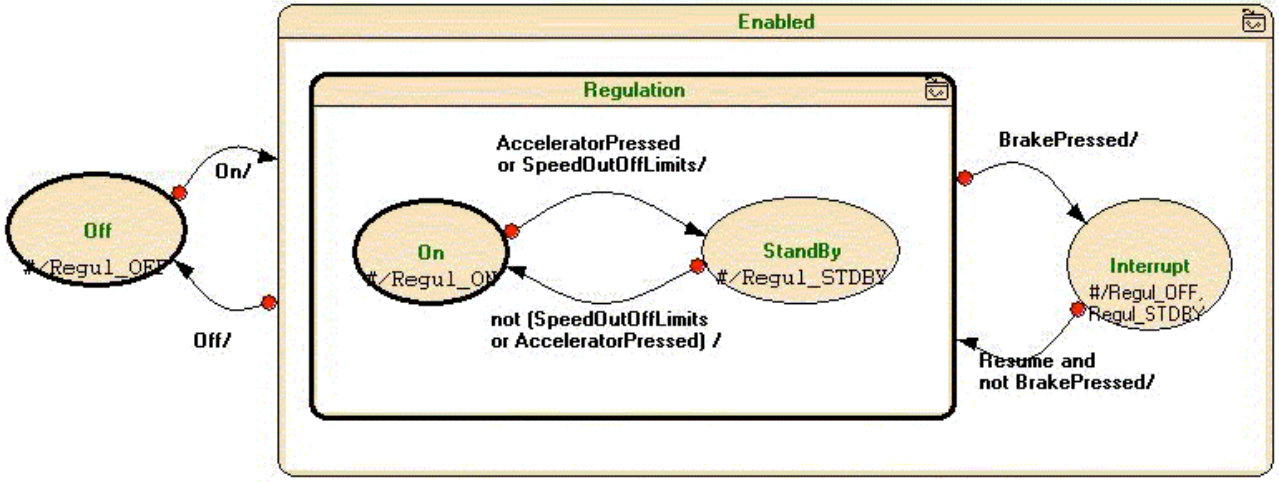

Observations

- automata can only appear at the leaves of the data-flow model: we need a finer integration
- forces the programmer to make decisions at the very beginning of the design (what is the good methodology?)
- the control structure is not explicit and hidden in boolean values: nothing indicate that modes are exclusive
- code certification?
- efficiency/simplicity of the code?
- how to exploit this information for program analysis and verification tools?

Second approach: designing a "language" extension

Mode automata (Lustre): Maraninchi & Rémond [ESOP98, SCP03]

- **Lustre + automata: states are made of Lustre equations**
- specific compilation method, generates good code
- restriction on the Lustre language, on the type of transitions

SignalGTI (Signal): Eric Rutten [EuroMicro95]

- **control structures encoded with clocks**
- all Signal, uniformity with the basic language, no specific compilation
- too demanding for the compiler, hard to program with

Lucid Synchrone V2: Hamon & Pouzet [PPDP00,SLAP04]

- **extend Lustre with a modular reset**, no restriction
- rely on the clock mechanism to express control structures in a safe way
- no particular syntax (manual encoding of automata), hard to program with

Our Proposal

- extend a basic clocked calculus (Lustre) with automata constructions
- founded on the use of *clocks*
- provide an ad-hoc syntax and follow a *clock directed approach*
- essentially a source-to-source compilation

Two implementations

- ReLuC compiler of Scade at Esterel-Technologies
- Lucid Synchrone language and compiler

Principles

- do not ask too much to a compiler: only provide automata constructs which compile well
- keep things simple: one definition of a flow during a reaction, one active state, substitution principle
- use clocks to give a precise semantics: we know how to compile clocked data-flow programs efficiently
- give a translation semantics into the basic data-flow language
- type and clock preserving source-to-source transformation
  - $T : ClockedBasicCalculus + Automata \rightarrow ClockedBasicCalculus$
  - $H \vdash e : ty$ iff $H \vdash T(e) : ty$
  - $H \vdash e : cl$ iff $H \vdash T(e) : cl$
  - the same for causality, initialization analysis

A clocked data-flow basic calculus

Expressions:

$$
\begin{array}{rcl}
e & ::= & C \mid x \mid e \texttt{ fby } e \mid (e, e) \mid x(e) \\
& & \mid x(e) \texttt{ every } e \\
& & \mid e \texttt{ when } C(e) \\
& & \mid \texttt{merge } e\ (C \rightarrow e) \ldots (C \rightarrow e)
\end{array}
$$

Equations:

$$
D \quad ::= \quad D \texttt{ and } D \mid x = e
$$

Enumerated types:

$$
td \quad ::= \quad \texttt{type}\, t \mid \texttt{type}\, t = C_1 + \ldots + C_n \mid td; td
$$

Basics:

- synchronous data-flow semantics, type system, clock calculus, etc.
- efficient compilation into sequential imperative code

N-ary Merge

`merge` combines two complementary flows (flows on complementary clocks) to produce a faster one:

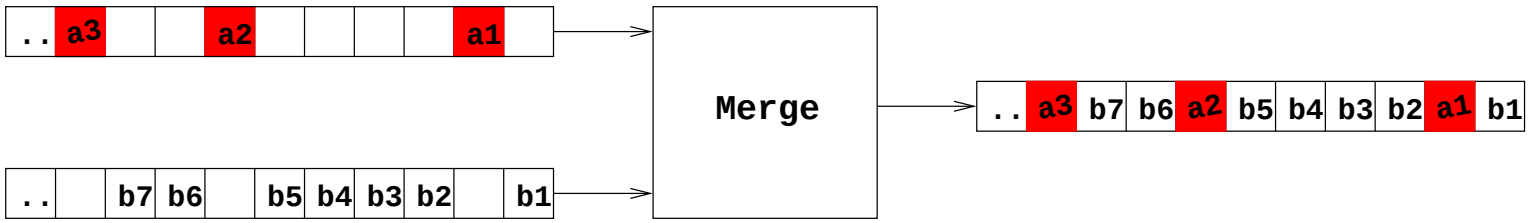

introduced in Lucid Synchrone V1 (1996), input language of ReLuC

Example: `merge c (a when c) (b whenot c)`

Generalization:

- can be generalized to n inputs with a specific extension of clocks with enumerated types
- the sampling e `when` c is written e `when` `True`(c)
- the semantics extends naturally and we know how to compile it efficiently
- thus, **a good basic for compilation**

Reseting a behavior

- in Scade/Lustre, the "reset" behavior of an operator must be explicitely designed with a specific reset input

```
let node count  () = s where
  rec s = 0 -> pre s + 1

let node resetable_counter r = s where
  rec s = if r then 0 else 0 -> pre s + 1
```

- painful to apply on large model
- propose a primitive that applies on node instance and allow to reset any node (no specific design condition)

Modularity and reset

Specific notation in the basic calculus: $x(e)$ `every` c

- all the node instances used in the definition of node x are reseted when the boolean c is true
- the reset is "asynchronous": no clock constraint between the condition c and the clock of the node instance

is-it a primitive construct? yes and no

- modular translation of the basic language with reset into the basic language without reset [PPDP00]
- essentially a translation of the initialization operator `->`
- e_1 `->` e_2 becomes `if` c `then` e_1 `else` e_2
- very demanding to the code generator whereas it is trivial to compile!
- useful translation for verification tools, basic for compilation
- thus, **a good basic for compilation**

Automata extension

- Scade/Lustre implicit parallelism of data-flow diagrams
- automata can be composed in parallel with these diagrams
- hierarchy: a state can contain a parallel composition of automata and data-flow
- each hierarchy level introduces a new lexical scope for variables

An example: the Franc/Euro converter

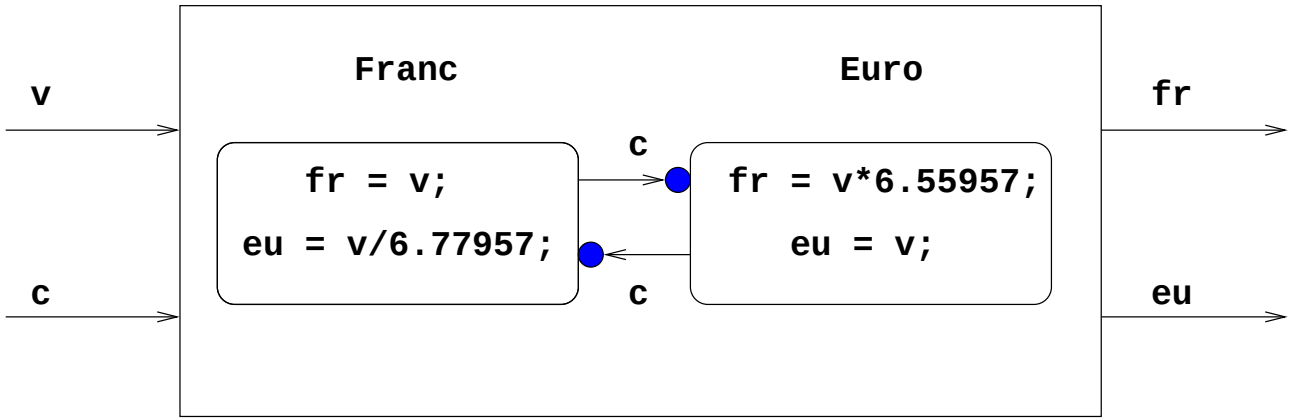

in concrete (Lucid Synchrone) syntax:

```
let node converter v c = (euro, fr) where
  automaton
    Franc -> do fr = v and eur = v / 6.55957
               until c then Euro
  | Euro -> do fr = v * 6.55957 and eu = v
              until c then Franc
  end
```

Features

Semantic principles:

- only one transition can be fired per cycle
- only one active state per automaton, hierarchical level and cycle

Transitions and states

- two kinds: Strong or Weak delayed

- both can be "by history" (H* in UML) or not (if not, both the SSM and the data-flow in the target state are reseted

Strong *vs* Weak Preemption

```
let node weak_switch on_off = o where
  automaton
    False -> do o = false until on_off then True
  | True -> do o = true until on_off then False
  end

let node strong_switch on_off = o where
  automaton
    False -> do o = false unless on_off then True
  | True -> do o = true unless on_off then False
  end
```

Equations and expressions in states

- flows are defined in the states (state actions)
- a flow must be defined only once per cycle
- the "pre" is local to its upper state (`pre e` gives the previous value of `e`, the last time `e` was alive)
- the substitution principle of Lustre is still true at a given hierarchy $\Rightarrow$ data-flow diagrams make sense!
- the notation `last x` gives access to the latest value of `x` in its scope (Mode Automata in the Maraninchi & Rémond sense)

Mode Automata, a simple example

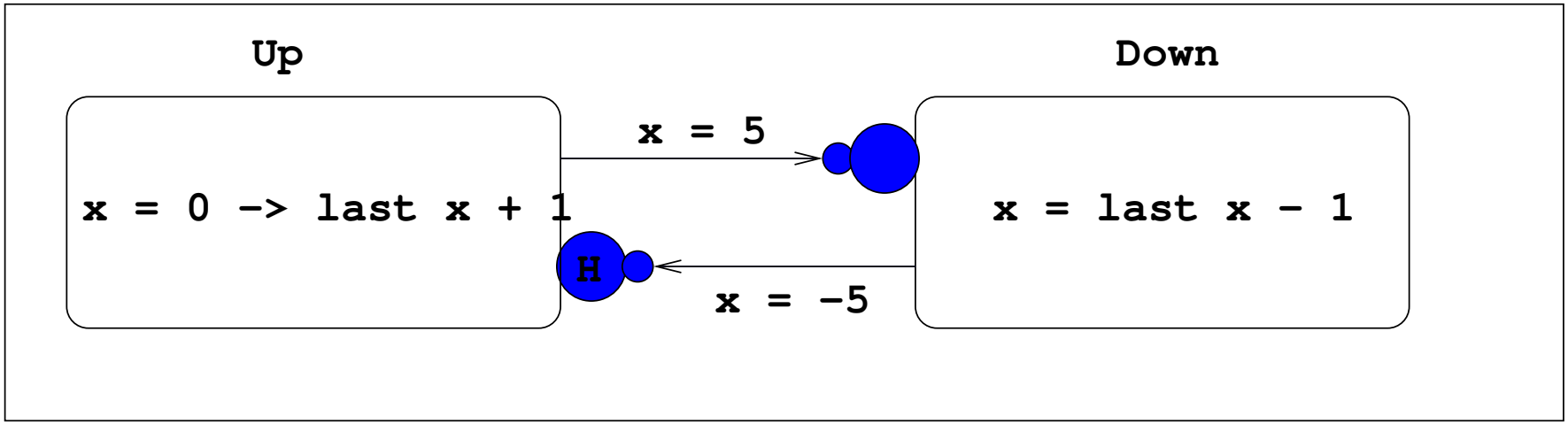

x = 0 1 2 3 4 5 4 3 2 1 0 -1 -2 -3 -4 -5 -4 -3 -2 -1 0 ...

```
let node two_modes () = x where
  rec automaton
        Up -> do x = 0 -> last x + 1
              until x = 5 continue Down
      | Down -> do x = last x - 1
                 until x = -5 continue Up
      end
```

The Cruise Control with Scade 6

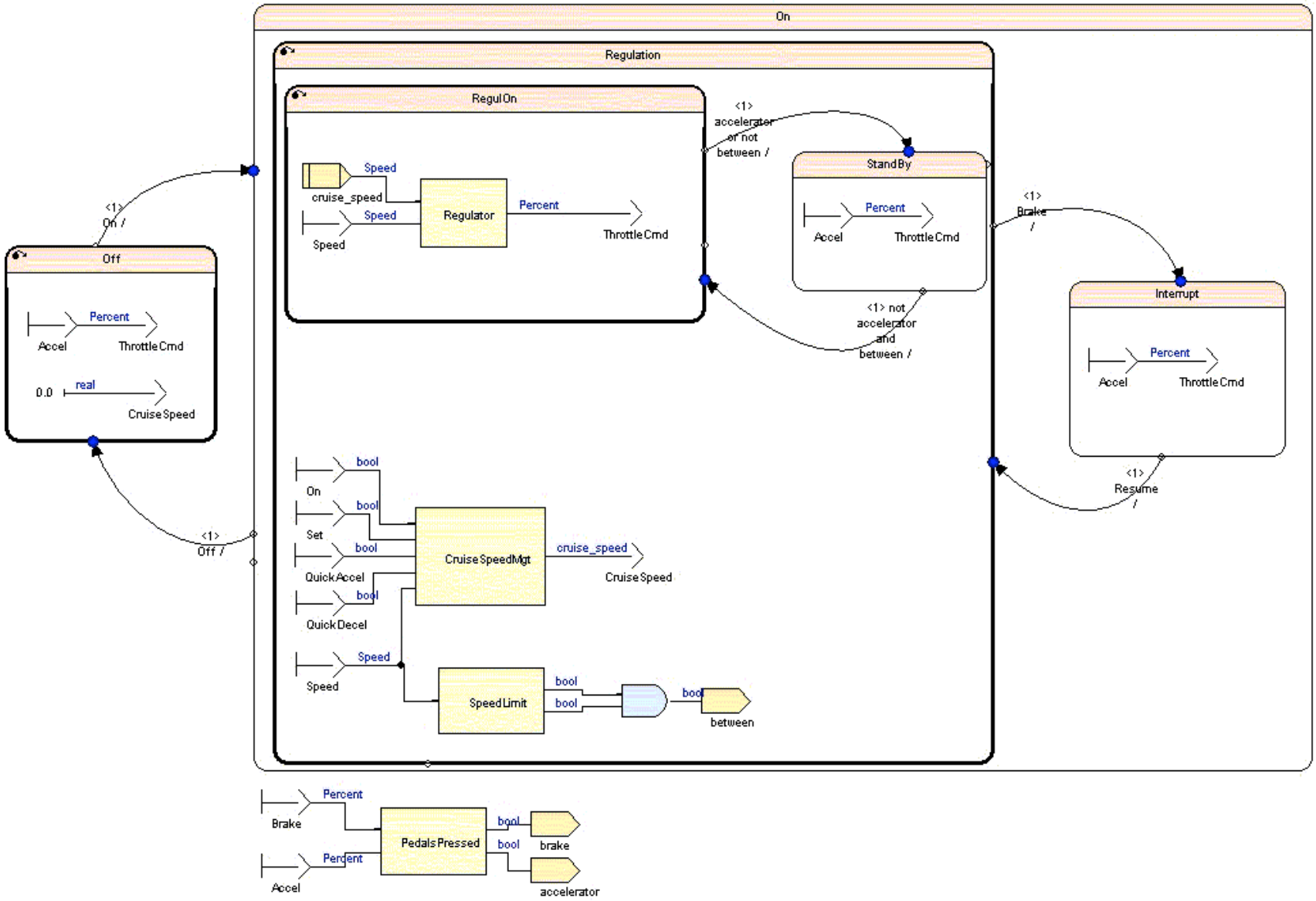

The extended language

$$
\begin{array}{lcl}
e & ::= & \cdots \mid \texttt{last}\ x \\
D & ::= & D\ \texttt{and}\ D \mid x = e \\
 & & \mid \texttt{match}\ e\ \texttt{with}\ C \rightarrow D\ \ldots\ C \rightarrow D \\
 & & \mid \texttt{reset}\ D\ \texttt{every}\ e \\
 & & \mid \texttt{automaton}\ S \rightarrow u\ s\ \ldots\ S \rightarrow u\ s \\
u & ::= & \texttt{let}\ D\ \texttt{in}\ u \mid \texttt{do}\ D\ w \\
s & ::= & \texttt{unless}\ e\ \ \texttt{then}\ S\ s \mid \texttt{unless}\ e\ \ \texttt{continue}\ S\ s \mid \epsilon \\
w & ::= & \texttt{until}\ e\ \ \texttt{then}\ S\ w \mid \texttt{until}\ e\ \ \texttt{continue}\ S\ w \mid \epsilon
\end{array}
$$

Translation semantics

- several steps in the compiler, each of them eliminating one new construction
- must preserve types (in the general sense)

Several steps

- compilation of the automaton construction into control structures (`match/with`)
- compilation of the `reset` construction between equations into the basic reset
- elimination of shared memory `last x`

Translation

$$
\begin{array}{lcl}
T(\texttt{reset}\ D\ \texttt{every}\ e) & = & \texttt{let}\ x = T(e)\ \texttt{in}\ CReset_x\ T(D) \\
 & & \text{where } x \notin fv(D) \cup fv(e) \\
T(\texttt{match}\ e\ \texttt{with}\ C_1 \rightarrow D_1\ ...\ C_n \rightarrow D_n) & = & CMatch\ (T(e)) \\
 & & \quad (C_1 \rightarrow (T(D_1), Def(D_1))) \\
 & & \quad ... \\
 & & \quad (C_n \rightarrow (T(D_n), Def(D_n))) \\
T(\texttt{automaton}\ S_1 \rightarrow u_1\ s_1\ ...\ S_n \rightarrow u_n\ s_n) & = & CAutomaton \\
 & & \quad (S_1 \rightarrow (T_{S_1}(u_1), T_{S_1}(s_1))) \\
 & & \quad ... \\
 & & \quad (S_n \rightarrow (T_{S_n}(u_n), T_{S_n}(s_n)))
\end{array}
$$

Static analysis

- they should mimic what the translation does
- well typed source programs must be translated into well typed basic programs

Typing: easy

- check unicity of definition (SSA form)
- can we write `last x` for any variable?
- No (in Lucid Synchrone): only shared variables can be accessed through a `last`
- otherwise, possible confusion with the regular `pre`

Clock calculus: easy under the following conditions

- free variables inside a state are all on the same clock
- the same for shared variables
- corresponds exactly to the translation semantics into `merge`

Initialization analysis

More subttle: must take into account the semantics of automata

```
let node two x = o where
  automaton
    S1 -> do o = 0 -> last o + 1
          until x continue S2
  | S2 -> do o = last o - 1 until x continue S1
  end
```

o is clearly well defined. This information is hidden in the translated program.

```
let node two x = o where
   o = merge s (S1 -> 0 -> (pre o) when S1(s) + 1)
               (S2 -> (pre o) when S2(s) - 1)
  and
   ns = merge s (S1 -> if x when S1(s) then S2 else S1)
                (S2 -> if x when S2(s) then S1 else S2)
  and
   clock s = S1 -> pre ns
```

This program is not well initialized:

```
let node two x = o where
  automaton
    S1 -> do o = 0 -> last o + 1
          unless x continue S2
  | S2 -> do o = last o - 1
          until x continue S1 end
```

- we can make a local reasonning
- because at most two transitions are fired during a reaction (strong to weak)
- compute shared variables which are necessarily defined during the initial reaction
- intersection of variables defined in the initial state and variables defined in the successors by a *strong* transition
- implemented in Lucid Synchrone (soon in ReLuC)

Conclusion and Future work

- An extension of a data-flow language with automata constructs
- various kinds of transitions, yet quite simple
- translation semantics relying on the clock mechanism which give a good discipline
- the existing code generator has not been modified and the code is (surprisingly) efficient
- fully implemented in Lucid Synchrone (next release V3)
- integration in Scade 6 is under way
- adding pure and valued signals, final states, etc.
- formal certification of the translation inside a proof assistant